Scotchlok™ 562

Self-Stripping Electrical Tap Connectors

UL LISTED
WIRE CONNECTOR
540H

Data Sheet

Application

Use 3M™ Scotchlok™ Tap Connector 562 to electrically connect a wire end (tap) to a through (run) wire and insulate the connection.

Wire Range

12 AWG solid or stranded thru 10 AWG stranded (4,0 mm^2 solid or stranded) copper conductors. For use with common thermoplastic insulated wire with a maximum insulation diameter of .190 inches (4,8 mm), such as: T, TW: when using nylon jacketed wire, such as THHN, THWN, MTW, the connector should be crimped using the 3M E-9BM tool. Maximum recommended current for general purpose use: 12 AWG - 20 AMPS, 10 AWG - 25 AMPS.

Construction

U-contact - Tin plated brass, .02 in. (.5 mm) thick

Insulator - Polypropylene
Color - yellow
UL 94-V-2

Weight

.0065 lb. (3,0 gm)

Recommended Installation Tools

3M™ Crimping Tool No. E-9BM
9" Linemans Pliers

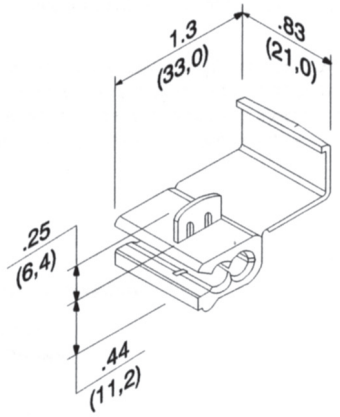

Installation Instructions

⚠ WARNING

Turn power off before installing or removing terminal. All electrical work should be done according to appropriate electrical codes.

1. Place unstripped run wire inside run channel.
2. Insert unstripped tap wire completely up to stop.
3. Hold tool perpendicular to the wires and make the connection by driving the u-contact down flush with the top of the plastic insulator.
4. Close hinged top cover until latched.

Regulatory Agencies

UL Listed - Tested per UL Standard 486C
UL file No. E23438

(Voltage rated at 600 volts maximum, building wire: 1000 volts maximum, signs and fixtures.
Temperature rated at 90˚C.)

Note: UL Listed for AWG only.

Federal Specification W-S-610D
"Commercial Packaging"

Type	Class	Kind	Style
II	I	Cu	F

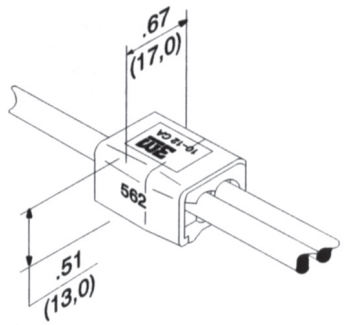

Engineering Specification

Self-Stripping Electrical Connector (as manufactured by 3M, part No. 562) capable of connecting a tap wire to a run wire, in the range of No. 12 AWG solid or stranded copper thru No. 10 AWG stranded copper. Connector shall be UL Listed and CSA Certified for 600 volts maximum, building wire: 1000 volts maximum, signs and fixtures, and temperature rated 90˚C maximum.

3M and Scotchlok are trademarks of 3M Company.

UL is a trademark of Underwriters Laboratories.

Important Notice
All statements, technical information, and recommendations related to 3M's products are based on information believed to be reliable, but the accuracy or completeness is not guaranteed. Before using this product, you must evaluate it and determine if it is suitable for your intended application. You assume all risks and liability associated with such use. Any statements related to the product which are not contained in 3M's current publications, or any contrary statements contained on your purchase order shall have no force or effect unless expressly agreed upon, in writing, by an authorized officer of 3M.

Warranty; Limited Remedy; Limited Liability.
This product will be free from defects in material and manufacture for a period of one (1) year from the time of purchase. **3M MAKES NO OTHER WARRANTIES INCLUDING, BUT NOT LIMITED TO, ANY IMPLIED WARRANTY OF MERCHANTABILITY OR FITNESS FOR A PARTICULAR PURPOSE.** If this product is defective within the warranty period stated above, your exclusive remedy shall be, at 3M's option, to replace or repair the 3M product or refund the purchase price of the 3M product. **Except where prohibited by law, 3M will not be liable for any indirect, special, incidental or consequential loss or damage arising from this 3M product, regardless of the legal theory asserted.**

3M

Electrical Markets Division

6801 River Place Blvd.
Austin, TX 78726-9000
800-626-8381
Fax 800-828-9329
www.3M.com/electrical

Recycled paper
40% Pre-consumer waste paper
10% Post-consumer waste paper

Litho in USA
© 3M 2006 78-8126-5858-7-B